DKG-21
PERSONAL GAMMA RADIATION DOSIMETER

Operating manual

BICT.412118.014 HE

CONTENTS

This operating manual is intended to inform the user about the principles of operation and rules of application of DKG-21 personal gamma radiation dosimeter. The manual contains all information necessary for proper use of the DKG-21 dosimeter (hereinafter called the dosimeter) and full realization of its technical possibilities.

Before operating the dosimeter, the user should be instructed on safety engineering and radiation safety, and should study this operating manual.

1 GENERAL GUIDELINES

1.1 Carefully study the operating manual (hereinafter referred to as the OM) before using the dosimeter.

1.2 The OM should always be kept with the dosimeter.

1.3 All records in the OM should be accurate and clear. Notes made in pencil, erasures and uncertified corrections are not allowed.

2 MAIN INFORMATION ABOUT THE DOSIMETER

The dosimeter meets the ТУ У 33.2-22362867-010:2007 technical requirements, and is registered in the State Register for Measuring Instruments, accepted for application in Ukraine. The State Register No У2514-07.

The dosimeter is a part of the automated system of personal dosimetry control ASPDC-21 registered in the State Register for Measuring Instruments, and is accepted for application in Ukraine under No. У1816-07.

Manufacturer:

Private Enterprise "SPPE "Sparing-Vist Center"
33 Volodymyr Velyky Str., Lviv 79026, Ukraine.
tel.: (+38032) 242-15-15; fax: (+38032) 242-20-15.
E-mail: sales@ ecotest.ua.

3 DESCRIPTION AND OPERATION

3.1 Purpose of use

3.1.1 The dosimeter is designed to measure individual equivalent dose $H_p(10)$ (hereinafter - ED) and equivalent dose rate $H_p(10)$ (hereinafter - EDR) of gamma radiation.

3.1.2 The dosimeter can be used in industrial enterprises and companies that deal with gamma radiation sources.

3.2 Technical specifications

3.2.1 Measurement range of gamma radiation EDR varies from 0.1 μSv/h to 1.0 Sv/h.

3.2.2 Main relative permissible error limit of gamma radiation EDR measurement at 0.95 confidence probability is:

- 20 % - in the EDR range of 1.0 to 10 μSv/h;
- 15 % - in the EDR range of 10 μSv/h to 1.0 Sv/h.

3.2.3 Measurement range of gamma radiation ED in the EDR range of 0.1 μSv/h to 1.0 Sv/h varies from 0.001 to 9999 mSv.

3.2.4 Main relative permissible error limit of gamma radiation ED measurement in the EDR range of 1.0 μSv/h to 1.0 Sv/h in the ED range of 0.01 to 9999 mSv at 0.95 confidence probability is 15 %.

3.2.5 Complementary relative permissible error limit of gamma radiation EDR and ED measurement caused by ambient temperature change from - 10 to + 50 ^{0}C is 5 % per each 10 ^{0}C of deviation from + 20 ^{0}C.

3.2.6 Energy range of registered gamma radiation is from 0.05 to 6.00 MeV.

3.2.7 Energy dependence at gamma radiation EDR and ED measurement in the energy range of 0.05 to 1.25 MeV is not more than ± 25 %.

3.2.8 Anisotropy at gamma quantum incidence at solid angle of ± 60^{0} relative to the main measurement direction (perpendicular to the front panel of the dosimeter), not more than:

- 15 % - for ^{137}Cs and ^{60}Co radionuclides;
- 70 % - for ^{241}Am radionuclide.

3.2.9 Time of operating mode setting at EDR measurement, not more than:

- 8 min – in the EDR range of 1.0 μSv/h to 10.0 μSv/h;
- 2 min - in the EDR range of 10.0 μSv/h to 1.0 Sv/h.

3.2.10 Time of EDR measurement, not more than:

- 10 s – in the EDR range of 1.0 μSv/h to 10.0 μSv/h;
- 5 s – in the EDR range of 10.0 μSv/h to 1.0 Sv/h.

3.2.11 Time of continuous operation, not less than:

- 2200 hrs – for EDR values less than 1.0 μSv/h
- 1400 hrs – in the EDR range of 0.1 μSv/h to 100 μSv/h;
- 560 hrs - in the EDR range of 100 μSv/h to 1.0 mSv/h;
- 110 hrs - in the EDR range of 1.0 mSv/h to 10 mSv/h;
- 35 hrs - in the EDR range of 10 mSv/h to 1.0 Sv/h.

3.2.12 Unstable readings during 8 hours of continuous operation, not more than 5 %.

3.2.13 The dosimeter is powered from DC source of 2.4 to 3.2 V voltage and capacity of 560 mA·h.

Note – Operating supply voltage – 3 V.

3.2.14 Maximum useful current at nominal voltage does not exceed:

- 0.4 mA – in the EDR range of 0.1 μSv/h to 100 μSv/h;
- mA - in the EDR range of 100 μSv/h to 1.0 mSv/h;
- 5 mA - in the EDR range of 1.0 mSv/h to 10 mSv/h;
- 15 mA - in the EDR range of 10 mSv/h to 1.0 Sv/h.

3.2.15 Dimensions, not more than:

- length - 90 mm;
- height - 55 mm;
- width - 10 mm.

3.2.16 Weight, not more than 0.08 kg.

3.2.17 The dosimeter performs measurements under the following conditions:

- temperature – from - 10 to + 50 ^{0}C;
- relative humidity – up to (95±3) % at + 35 ^{0}C temperature;
- atmospheric pressure – from 84 to 106.7 kPa.

3.2.18 The dosimeter is resistant to sinusoidal vibrations with 10 to 55 Hz frequency, frequency bias 0.15 mm lower than the crossover frequency.

3.2.19 The dosimeter is resistant to shocks with the following parameters:

- shock pulse duration – 9.5 ms;
- number of shocks - 1000±10;
- maximum shock acceleration - 100 m/s^2.

3.2.20 The dosimeter in shipping container endure:

- ambient air temperature – from - 50 to + 50 ^{0}C;
- relative humidity – up to (95±3) % at + 35 ^{0}C temperature;

- shocks with acceleration of 98 m/s^2, shock pulse duration of 16 ms (number of shocks - 1000±10 in each direction) or equivalent shake tests.

3.2.21 The dosimeter is resistant to the influence of constant and alternating magnetic field with (50±1) Hz frequency and 400 A/m field density.

3.2.22 The dosimeter is resistant to the influence of gamma radiation EDR up to 10 Sv/h during 50 minutes.

3.2.23 The dosimeter has “Clock” and “Alarm clock” operating modes.

3.2.23.1 The alarm clock rings during one minute or until pressing any button.

3.2.24 Gamma radiation EDR and ED threshold level values with discreteness of a unit of a programmable digit in overall operating measurement range can be programmed in the dosimeter with the help of the control buttons.

3.2.25 The dosimeter sends audio and light signals if the programmed gamma radiation EDR or ED threshold level is exceeded.

3.2.25.1 The dosimeter sends an interrupted audio signal when 90 % of the programmed threshold level of gamma radiation ED is reached. Press any button to switch this audio signaling off.

3.2.26 Gamma radiation EDR and ED values as well as EDR and ED threshold level values alternately appear on the digital liquid crystal display (LCD), indicating the correspondence of information.

3.2.26.1 The dosimeter indicates the statistical error of the displayed gamma radiation EDR measurement result. Indication is performed by a blinking or steady decimal point.

3.2.27 The LCD can be switched off automatically not later than in 5 min provided that the current gamma background is lower than the preset threshold level. The LCD may be instantly switched on by pressing any button or when gamma background exceeds the preset threshold level.

3.2.28 The dosimeter includes the mode of automatic power supply testing and battery status indication with the help of a battery symbol. This symbol appears in the right upper corner of the LCD. The level of battery discharge is indicated by a number of blinking segments. Full discharge is indicated by all four segments blinking and by audio signaling.

3.2.29 Design of the dosimeter supports deactivation.

3.2.30 Reliability Requirements

3.2.30.1 Mean time to failure, not less than 6000 h. Failure criterion is nonconformity to the requirements stated in 3.2.2.

3.2.30.2 Average value of operational readiness, not less than 0.999.

3.2.30.3 Average operating life till the first major repair, not less than 10000 hrs, and average service life, not less than 10 years.

Limit tolerance state criterion is deviation of parameters from the values stated in 3.2.2 that can not be eliminated.

3.2.30.4 Average shelf life, not less than 10 years.

3.2.31 Service possibilities of the dosimeter in case of compatible operation with the personal computer (hereinafter - the PC).

3.2.31.1 The dosimeter supports recording the history of dose accumulation during working shift (8 hrs) in the nonvolatile memory with the discreteness of the record change of 1 min in the range from 5 to 255 min with reference to real time.

3.2.31.2 The dosimeter supports transmitting the history of dose accumulation to the PC via the infrared port. The distance of positive exchange is not more than 0.3 m between the dosimeter and the infrared port adapter (IRPA).

3.2.31.3 With the help of the PC the dosimeter supports:

- blocking the mode of power supply switch off until data reading procedure finished;
- blocking the modes of indication (EDR, EDR threshold, ED, ED threshold, clock and alarm clock); change (EDR threshold, ED threshold) and correction of clock and alarm clock settings.

3.3 Delivery kit of the dosimeter

3.3.1 The delivery kit is presented in Table 3.1.

Table 3.1 – Delivery kit of the DKG-21 dosimeter

Item	Type	Quantity
Personal gamma radiation dosimeter DKG-21	BICT.412118.014	1
Battery *	CR 2450 (Panasonic)	1
Operating manual	BICT.412118.014 HE	1
Case with a clip	Model is not specified	1
Carton	BICT.321342.014	1
* Other batteries similar in application, safety and reliability can be used		

3.4 Design and theory of operation

3.4.1 General information

The dosimeter is designed as a mono block with a built-in detector of gamma radiation, with a printed circuit board equipped with a circuit of anode voltage formation, digital processing, control and indication, an infrared port of data exchange, and a battery.

Gamma radiation detector transforms radiation into the sequence of voltage pulses; the number of pulses is proportional to the registered radiation intensity.

The circuit of anode voltage formation, digital processing, control and indication supports:

- scaling and linearization of the counting response of the detector;
- measurement of gamma radiation EDR through measurement of the average pulse frequency of the detector output;

- measurement of gamma radiation ED through measurement of total amount of pulses of the detector output;
- measurement of real time;
- formation & stabilization of anode voltage of the detector;
- control of operating modes of the dosimeter;
- indication of measurement results.

Power for operation is supplied by a disk-type lithium battery of CR 2450 (Panasonic) type.

3.4.2 **Design description**

The dosimeter is designed as a flat square plastic body (Figure B.1, B.2), which consists of the upper (1) and lower (2) covers, the battery compartment lid (3), the film front panel (4) and the metal ring (5) used to fasten the strap.

The transparent window (6), with the LCD (7) located behind it, is located in the left upper corner of the front panel. Two smaller windows (8, 9) for the optical system of the infrared port (10) and the light-emitting diode indicator (11) are located next to this window. Two membrane control keys (12) with corresponding inscriptions are located in the right lower corner of the front panel.

The printed circuit board (13) is located inside the body, where all elements of the electric circuit, with an exception of the loudspeaker and the battery, are located. The loudspeaker (14) is located in a cylindrical sound chamber, done as a construct of the upper cover. The loudspeaker is mechanically fastened and electrically connected with the circuit by three spring contacts, located on the printed circuit board.

The components of the device and the printed circuit board are screwed together with the help of five screws.

The battery (15) is inserted into the battery compartment (16), and fastened to the circuit by two spring contacts. The inscriptions that specify type, voltage and polarity of the battery connection are placed at the bottom of the battery compartment.

3.5 Labeling and sealing

3.5.1 The front panel of the dosimeter is inscribed with:

- name – “Personal gamma radiation dosimeter DKG-21”;
- trademark of the manufacturer;

3.5.2 The rear panel of the dosimeter is inscribed with:

- “Made in Ukraine”;
- name of the manufacturer;
- ТУ number;
- serial number of the dosimeter according to the numbering system of the producer-enterprise);

Ingress protection rating - “IP31”;

- mechanical center of the detector with “+” symbol;
- month and year of manufacture.

3.5.3 Labeling quality is maintained during service life under all conditions and modes, except for labeling done on the individual package.

3.5.4 The dosimeter accepted by the Quality Control Department (QCD) and prepared for packing is sealed with a special film seal, covering the screw heads, which fasten together the upper and the lower covers, or a paste seal in the hollow above the head of the fastening screw.

3.6 Packing

3.6.1 Packing is performed in accordance with the requirements specified in BICT.412118.014.

3.6.2 The dosimeter is packed in a special cardboard box, which (together with the operating manual), in its turn, is placed in a transparent polyethylene package, welded after packing performed.

4 PROPER USE OF THE DOSIMETER

4.1 Operating limitations

4.1.1 Operating limitations are presented in 3.2.14, 3.2.18 - 3.2.1.23.

4.2 Preparation of the dosimeter for operation

4.2.1 Scope and order of external examination

4.2.1.1 Before using the dosimeter, unpack it and check if the delivery kit is complete. Examine for mechanical damages.

4.2.2 Rules and order of examination for operational readiness

4.2.2.1 Examine the control buttons before switching the dosimeter on.

4.2.2.2 Open the battery compartment and make sure the battery is inserted, connections are reliable, and there is no leakage of salts after durable storage of the dosimeter. In case there is salt leakage, remove the battery. Clean it, if possible, or replace, if not. Insert the battery and close the battery compartment.

4.2.3 **Guidelines on switching on and testing the dosimeter**

4.2.3.1 Prepare the dosimeter for operation. Do the following:

- unpack the dosimeter;
- open the battery compartment and insert the battery of CR 2450 type observing the polarity. The dosimeter should enter the mode of gamma radiation EDR measurement indicated by “µSv/h” measurement units, which are constantly displayed on the LCD.

4.2.3.2 Press shortly the MODE button and make sure the dosimeter has entered the mode of gamma radiation ED indication. ED units of measurement expressed in “mSv” should appear on the LCD.

4.2.3.3 Press shortly the MODE button and make sure the dosimeter has entered the mode of real time indication, which is shown by a one-second blinking colon between the two pairs of the LCD digits.

4.2.3.4 Press shortly the MODE button and make sure the dosimeter has entered the mode of the alarm clock setting, which is indicated by an unblinking colon between the two pairs of digits on the LCD. After setting the alarm clock (4.3.3.7) press shortly the MODE button to switch it on, which should be indicated by a “)))” symbol on the LCD.

4.2.3.5 Hold the MODE button pressed for 4 s to switch the dosimeter off.

Note. The battery should be replaced if the low battery symbol appears on the LCD – gradual blinking of one to four segments of the battery symbol in the right top corner of the LCD, which depends on the increasing process of discharge, when the dosimeter is switched on irrespective of the selected mode. All four segments of the symbol are blinking and a short audio signal is generated each 4 s when the battery is fully discharged.

4.2.4 **List of possible troubles and troubleshooting**

4.2.4.1 The list of possible troubles and troubleshooting is presented in Table 4.1.

Table 4.1 - Possible troubles and troubleshooting

Trouble	Probable cause	Troubleshooting
1 The dosimeter does not switch on at pressing the MODE button	1 The battery is discharged 2 Poor contact between the battery and the battery compartment clamps	1 Replace the battery 2 Restore the contact between the battery and the clamps
2 The “Err” symbol is displayed on the LCD after the battery has been replaced	Failure of the nonvolatile memory of the dosimeter	Send the dosimeter for repair to the manufacturer
3 The “Err1” symbol is displayed on the LCD during operation of the dosimeter	Failure of the anode voltage former or the ionizing radiation detector	Send the dosimeter for repair to the manufacturer

4.2.4.2 At failure to eliminate the troubles presented in Table 4.1, or at detection of more complicated troubles, the dosimeter should be sent for repair to the manufacturer.

4.3 Use of the dosimeter

4.3.1 Safety measures

4.3.1.1 The dosimeter meets the requirements of the valid standards with regard to people protection against electric-shock hazard.

4.3.1.2 The dosimeter contains electric circuits of voltage up to 400 V; demount the dosimeter when the power supply is switched off.

4.3.1.3 The dosimeter's design excludes any electric voltages on the outside of the dosimeter.

4.3.1.4 A special protective jacket is used to prevent accidental contact with conductive parts.

4.3.1.5 Ingress protection rating is IP31.

4.3.1.6 Disposal of the dosimeter should be performed in compliance with the general rules, i.e. metal is recycled or melted, and plastic parts are dumped.

Note. If the dosimeter is contaminated by any liquid or dry radionuclides and it is impossible to completely deactivate the device, the dosimeter should be buried as solid radioactive waste.

4.3.2 Operating modes of the dosimeter

4.3.2.1 The dosimeter operates within the following modes:

- switching the dosimeter on/off;
- gamma radiation EDR measurement and indication;
- programming of audio and light alarm threshold levels of gamma radiation EDR;
- gamma radiation ED measurement indication;
- programming of audio and light alarm threshold level of gamma radiation ED;
- indication and correction of real time;
- indication and correction of the alarm clock settings, switching the alarm clock on/off;

- power supply control;
- performance monitoring of the ionizing radiation detector.

4.3.3 **Operation procedure of the dosimeter**

4.3.3.1 **Switching the dosimeter on/off**

Press shortly the MODE button to switch the dosimeter on. The information displayed on the LCD shows that the dosimeter is on.

At the same time the infrared port of the dosimeter is activated for 15 s. While the infrared port is active, you can perform the procedure of data exchange with the PC, programming of the threshold levels, intervals of dose history accumulation, and permit/prohibit certain operating modes of the dosimeter. The blinking digits on the LCD indicate that the infrared port is active. As soon as data exchange with the PC is finished, the dosimeter starts accumulating dose history with the preset interval. Otherwise, the dosimeter starts operating in the stand-alone mode with integral dose accumulation without dose history accumulation.

Press the MODE button once again and hold it pressed for 4 s to switch the dosimeter off. If the dosimeter is switched on in the stand-alone mode, e.i. no data exchange with the PC is done, the dosimeter will be switched off. If during switching it on data exchange between the dosimeter and the PC took place the effort to switch the dosimeter off would only activate the infrared port for 15 s.

4.3.3.2 **Measurement of gamma radiation EDR**

The mode of gamma radiation EDR measurement is entered automatically after the dosimeter is switched on. The units of measurement are expressed in μSv/h. The process of EDR measurement accumulation and averaging will start after the dosimeter is switched on. The process will continue up to 1600 s at EDR values close to background. The data on the LCD will be updated each 10 s. However, close to true result will appear in 2-3 minutes. At increase of the radiation intensity, the time of gamma radiation EDR measurement averaging and the time of data updating on the LCD will decrease to minimum 2 s.

The units of measurement are expressed in μSv/h, mSv/h, and Sv/h.

The statistical error of the displayed measurement result of gamma radiation EDR is indicated by the blinking or steady decimal point. The blinking point indicates that the statistical error of the indicated EDR measurement result exceeds maximum permissible error. Hence, the measurement result can be used only for rough evaluation of gamma radiation EDR. The steady point informs that the statistical error of the EDR measurement result is within the permissible range.

The main direction of the dosimeter at EDR measurement is the direction perpendicular to the front (rear) panel of the dosimeter.

Gamma radiation EDR measurement result is considered to be the arithmetic mean of five last measurements in 8 min after the intensity of radiation is changed at gamma radiation EDR levels in the range of 1.0 to 10.0 μSv/h, or within 2 min to 2 s for the levels in the range of 10.0 μSv/h to 1.0 Sv/h.

Measurement intervals and subranges will be set automatically according to the intensity of registered radiation.

Note. The process of data averaging can be stopped forcedly for quick estimating of gamma radiation EDR. To do this, press shortly the THRESHOLD button. Rough evaluation of gamma radiation EDR value will be performed within 1 min.

4.3.3.3 **Programming of audio and light alarm threshold level of gamma radiation EDR**

Audio and light alarm threshold levels of gamma radiation EDR are programmed in the mode of gamma radiation EDR measurement. Press the THRESHOLD button and hold it pressed for 4 s to start programming. The low-order digit will start blinking on the LCD.

Set an appropriate value of the low-order digit by pressing and releasing the THRESHOLD button. Press shortly the MODE button to proceed to the programming of another digit, the latter will start blinking. The necessary value of the digit is set with short pressing and releasing the THRESHOLD button.

After the last digit of the threshold level is set and at next pressing of the MODE button, the LCD will blink four times, indicating that the value is fixed. The dosimeter will enter the mode of gamma radiation EDR measurement.

Press the THRESHOLD button and hold it pressed not more than 4 s after a new threshold level value appears to check the value of the fixed EDR threshold level.

When holding the THRESHOLD button pressed for more than 4 s the low-order digit starts blinking, indicating that a new threshold level value can be programmed.

Blinking of the red light-emitting diode and a two-tone audio alarm indicate that the programmed EDR threshold level has been exceeded.

Notes

1 The EDR threshold level value of 1.0 μSv/h is set automatically after the dosimeter is switched on.

2 A preset zero value of the EDR threshold level sets off the alarm system when the threshold level is exceeded.

4.3.3.4 **Indication of gamma radiation ED measurement**

Press shortly the MODE button to enter the mode of gamma radiation ED measurement indication. This mode follows the mode of gamma radiation EDR measurement (entered automatically after the dosimeter is switched on).

The “mSv” symbol that appears on the LCD indicates you have entered the appropriate mode. A comma after the first left digit will appear on the LCD after the dosimeter is switched on. The comma will automatically shift to the right until full completion of the ED scale of the dosimeter as the gamma radiation ED measurement value increases. The units of gamma radiation ED measurement are expressed in mSv.

4.3.3.5 **Programming of audio and light alarm threshold levels of gamma radiation ED**

Audio and light alarm threshold level of ED is programmed in the mode of gamma radiation ED measurement. Hold the THRESHOLD button down for more than 4 s to start programming. The low-order digit will start blinking on the LCD.

Set an appropriate value of the low-order digit by pressing and releasing the THRESHOLD button. Press shortly the MODE button to proceed to programming of another digit, the latter will start blinking. Set an appropriate value of the digit by pressing and releasing the THRESHOLD button.

After the last digit of the threshold level is set and at next pressing of the MODE button, the LCD will blink four times, indicating that the value is fixed, and the dosimeter will enter the mode of gamma radiation ED indication.

Press the THRESHOLD button and hold it pressed for maximum 4 s after the threshold level value appears to check the value of the fixed ED threshold level.

Hold the THRESHOLD button pressed for more than 4 s to set the threshold value to zero. The low-order digit will start blinking at that indicating that a new threshold level value can be programmed.

Blinking of the red light-emitting diode and a two-tone audio alarm indicate that the programmed ED threshold level has been exceeded.

At reaching 90 % of the programmed threshold level, the dosimeter sends an interrupted audio signal to inform the user about possible near reaching the ED threshold level. Press any button to switch this audio alarm off.

Note. The ED threshold level value of 0.000 mSv is set automatically when the dosimeter is switched on indicating that the alarm is switched off.

4.3.3.6 **Indication and correction of real time**

Press shortly the MODE button to enter the mode of real time indication. This mode follows the mode of gamma radiation ED measurement.

It is indicated by a one-second blinking “:” symbol between the two pairs of the LCD digits.

The digits from the right to the left show the following: the first digit indicates minutes; the second one - tens of minutes; the third one - hours; the fourth one - tens of hours.

Press the THRESHOLD button and hold it down until two digits to the right from the “:” symbol start blinking to correct the value of real time. Release the button afterwards. The proper values of units and tens of minutes are fixed by further pressing and holding the THRESHOLD button. The minutes can also be corrected by short pressing of the THRESHOLD button. Each pressing will change the value per unit. Press shortly the MODE button to correct the value of hours. The two digits to the left from the “:” symbol start blinking at that. The hour value correction is performed likewise. Press shortly the MODE button once again to exit the mode of real time correction.

4.3.3.7 **Indication and correction of alarm clock settings, switching alarm clock on/off**

Press shortly the MODE button to enter the mode of indication of the alarm clock time. This mode follows the mode of real time indication. A non-blinking “:” symbol between the two pairs of digits on the LCD indicates you have entered the appropriate mode.

Press the THRESHOLD button and hold it down until the two digits to the right from the “:” symbol start blinking to correct the alarm clock settings. Release the button afterwards. Set the proper values of units and tens of minutes by further pressing and holding the THRESHOLD button. The minutes can also be corrected by short pressing of the THRESHOLD button. The value will change per unit each time in this case. Press shortly the MODE button to correct the value of hours. The two digits to the left from the “:” symbol start blinking at that. Hour values can be corrected likewise.

Press shortly the MODE button to switch the alarm clock on/off after correcting the hour values of the alarm clock. A blinking sound symbol “)))” should appear on the LCD. Press shortly the THRESHOLD button; make the non blinking sound symbol appear on the LCD to switch the alarm clock on.

Press shortly the THRESHOLD button to switch the alarm clock off. The sound symbol should extinct. Fix the alarm clock settings by further short pressing of the MODE button. If the alarm clock is on, the sound symbol will be displayed on the LCD irrespective of the selected operating mode.

Note. The alarm clock will continue working even after the power supply of the dosimeter is off (provided that the batteries are inserted). The dosimeter will automatically enter the mode of real time indication when the alarm clock goes off. Press any control button to switch off audio signal of the alarm clock. Otherwise, audio signal will be disabled automatically in a minute after the alarm clock rings.

4.3.3.8 **Power supply control**

The mode of power supply control is turned on automatically at switching on the dosimeter. It is indicated by the four-segment battery symbol displayed in the right upper corner of the LCD. The number of segments blinking starting from the last right one shows the level of battery discharge. Blinking of three and more segments means that the battery should be replaced with new one.

4.3.3.9 **Operability check of the detector**

The mode of detector's operability check is switched on as soon as the dosimeter is on. If the detector fails, the "Err1" symbol is displayed on the LCD, which means the dosimeter should be sent for repair.

5 TECHNICAL MAINTENANCE

5.1 Technical maintenance of the dosimeter

5.1.1 General instructions

The list of operations performed during technical maintenance (hereinafter called TM) of the dosimeter, the order and the peculiarities of operational phases are presented in Table 5.1.

Table 5.1 - List of operations during technical maintenance

Operations	TM type			OM item No.
	during		During long-term storage	
	everyday use	periodical use (annually)		
External examination	+	+	+	5.1.3.1
Delivery kit completeness check	-	+	+	5.1.3.2
Operability check	+	+	+	5.1.3.3
Power supply disconnection	-	+	+	5.1.3.4
Verification of the dosimeter	-	+	+	5.2

Note. “+” means the operation is applicable for this type of TM; “-” means the operation is not applicable.

5.1.2 Safety measures

5.1.2.1 TM safety measures fully comply with safety measures stated in item 4.3.1 of the present OM.

5.1.3 Maintenance procedure of the dosimeter

5.1.3.1 External examination

External examination of the dosimeter should be performed in the following order:

- check the technical condition of surface, inspect for integrity of seals, absence of scratches, traces of corrosion, surface damage of the dosimeter;
- check the condition of clamps in the battery compartment.

5.1.3.2 Delivery kit completeness check

Check if the delivery kit is complete according to Table 3.1.

5.1.3.3 Operability check of the dosimeter.

Operability check of the dosimeter is performed according to item 4.2.3 of the present OM.

5.1.3.4 Power supply switch off

Power supply should be switched off before the long-term storage of the dosimeter. Do this as follows:

- switch the dosimeter off;
- open the lid of the battery compartment;
- remove the batteries;
- examine the battery compartment, check the contact clamps accuracy, clean the battery compartment from contamination and contact clamps from oxides;
- make sure there is no humidity, no salt spots on the surface of the batteries, and no damages of the insulated coating.

5.2 Verification

5.2.1 The DKG-21 dosimeter should be verified after manufacture, repair or during use.

5.2.2 The interval between verifications should not exceed 12 months.

5.2.3 Verification operations are presented in Table 5.2.

Table 5.2 - Verification operations

Operation name	Verification technique No.
External examination	5.2.7.1
Testing	5.2.7.2
Calculation of main relative permissible error limit of gamma radiation EDR measurement in the EDR range of 1.0 μSv/h to 1.0 Sv/h	5.2.7.3, 5.2.7.4
Calculation of main relative permissible error limit of gamma radiation DE measurement in the EDR range of 1.0 μSv/h to 1.0 Sv/h in the ED range of 0.01 to 9999 mSv	5.2.7.3, 5.2.7.5
Presentation of verification results	5.2.7.6

5.2.4 Verification facilities are presented in Table 5.3.

Table 5.3 - Verification facilities

Name	Regulatory Document or Main Technical Specifications
УПГД-3Б testing equipment	Gamma radiation EDR range from 0.01 μSv/h to 1 Sv/h. Energy range from 59 KeV to 1.25 MeV. Main relative permissible error limit of gamma radiation EDR and ED is 4 % at 0.95 confidence probability
Phantom	Dimensions: 30 × 30 × 15 cm; PMMA walls (polymethylmethacrylate, front wall thickness – 2.5 mm, other walls thickness – 10 mm); phantom is filled with distilled water

Table 5.3 (continued)

Name	Regulatory Document or Main Technical Specifications
Aspiration psychrometer	Temperature measurement range from - 30 °C to + 50 °C. Temperature measurement error is ± 0.1 °C. Relative humidity measurement range from 10 to 100 %. Relative humidity measurement error from ± 12 % at t = -10 °C to ± 2 % at t = 30 °C
Stopwatch	Measurement range from 1 s to 59 min
Control aneroid barometer	Pressure measurement range from 81.3 to 105.3 kPa (from 610 to 790 mm Hg). Pressure measurement error is ± 0.107 kPa (0.8 mm Hg)

Notes

1 All verification facilities should be certified, tested or calibrated.

2 Use of other measuring instruments, tools and equipment with specifications similar to those outlined in Table 5.3 is allowed.

5.2.5 Verification should be performed in accordance with safety measures presented in 4.3.1 of the OM.

5.2.6 Verification conditions

Verification should be performed under the following conditions:

- ambient air temperature range within (20±5) °C;
- relative air humidity from 30 to 80 %;
- atmospheric pressure from 86 kPa to 106.7 kPa;
- natural background level of gamma radiation should not exceed 0.25 μSv/h;
- power supply voltage within (3.0±0.2) V.

5.2.7 **Verification procedure**

5.2.7.1 External examination

5.2.7.1.1 During external examination the dosimeter should meet the following requirements:

- the delivery kit should be completed as stated in Table 3.1;

- labeling should be accurate;
- QCD seals should not be violated;
- the dosimeter should be free from mechanical damage that may affect its performance.

5.2.7.1.1.2 If the requirements in 5.2.7.1.1 are satisfied, proceed to the next verification operation.

5.2.7.1.1.3 If the delivery kit is not completed as stated in Table 3.1, verification should be stopped until the delivery kit is complete.

5.2.7.1.1.4 If labeling and sealing requirements are not satisfied, and the dosimeter has the signs of mechanical damages that affect its performance, it can not be verified and should be sent for repair.

5.2.7.2 Testing

5.2.7.2.1 Perform operations stated in 4.2.3.

5.2.7.2.1.1 If all operations stated in 4.2.3 are performed, proceed to the next test operation.

5.2.7.2.1.2 Even if a single operation stated in 4.2.3 can not be performed, the dosimeter should not be verified and should be sent for repair.

5.2.7.3 EDR and ED measurement should be performed on the phantom with 30x30x15cm dimensions, with PMMA walls (polymethylmethacrylate, front wall thickness - 2.5 mm, other walls thickness – 10 mm); the phantom should be filled with distilled water.

5.2.7.3.1 During measurement the dosimeter should be placed close to the phantom surface, directed to gamma source. The indicator of the dosimeter should be directed towards gamma source.

5.2.7.4 Calculation of main relative permissible error of gamma radiation EDR measurement in the EDR range of 1.0 μSv/h to 1.0 Sv/h is performed as follows.

5.2.7.4.1 Prepare the dosimeter for gamma radiation EDR measurement and program zero value of EDR threshold level.

5.2.7.4.2 Fix the dosimeter on the phantom according to item 5.2.7.3 in the УПГД-3Б carriage so that the mechanical center of the collimator coincides with the mechanical center of the detector. Take ten measurements of background EDR ($\dot{H}_{p\phi i}(10)$) in УПГД-3Б with 10 s interval eight minutes after the dosimeter is switched on. Calculate the average EDR value in μSv/h by the formula

$$\overline{\dot{H}}_{p\phi}(10) = \frac{\sum_{i=1}^{10} \dot{H}_{p\phi i}(10)}{10} \qquad (5.1)$$

5.2.7.4.3 Place the carriage УПГД-3Б together with the phantom and the dosimeter in the position, where EDR from the ^{137}Cs source with radionuclide is $\dot{H}_{p0}(10)$ = (1.15±0.15) μSv/h. Take ten measurements of EDR with 10 s interval eight minutes after irradiation of the dosimeter was started. Calculate the average EDR value ($\overline{\dot{H}}_{p\Sigma}(10)$ by the formula (5.1).

Calculate the EDR value without gamma background EDR of the УПГД-3Б by the formula

$$\overline{\dot{H}}_p(10) = \overline{\dot{H}}_{p\Sigma}(10) - \overline{\dot{H}}_{p\phi}(10) \qquad (5.2)$$

Note - The distance between the mechanical center of the source and the mechanical center of the dosimeter's detector is considered to be the distance between the mechanical center of the source and the plane, which is perpendicular to the direction of gamma-quanta beam spreading, and passes through the mechanical center of the dosimeter in this plane.

5.2.7.4.4 Calculate the main relative permissible error limit of EDR measurement in percentage.

5.2.7.4.5 Perform operations 5.2.7.4.3, 5.2.7.4.4 for EDR $\dot{H}_{p0}(10)$ = (12±2) μSv/h in 3 minutes after the dosimeter irradiation start provided that EDR measurement time is 5 s.

5.2.7.4.6 Perform operations 5.2.7.4.5 for EDR $\dot{H}_{p0}(10)$ = (1.2±0.2) mSv/h.

5.2.7.4.7 Perform operations 5.2.7.4.5 for EDR $\dot{H}_{p0}(10)$ = (12±2) mSv/h.

5.2.7.4.8 Perform operations 5.2.7.4.5 for EDR $\dot{H}_{p0}(10)$ = (900±100) mSv/h.

5.2.7.4.9 Maximum value of all received errors is the limit of main relative permissible error of gamma radiation EDR measurement.

5.2.7.4.10 If the main relative permissible error limit of gamma radiation EDR measurement at 0.95 confidence probability does not exceed:

- 20 % in the EDR range of 1.0 to 10 μSv/h;
- 15 % in the EDR range of 10 μSv/h to 1.0 Sv/h,

proceed to the following verification operation.

5.2.7.4.11 If the main relative permissible error limit of gamma radiation EDR measurement does not meet the requirements stated in 5.2.7.4.10, the dosimeter can not be verified and should be sent for repair.

5.2.7.5 Calculation of main relative permissible error limit of gamma radiation ED measurement in the EDR range of 1.0 μSv/h to 1.0 Sv/h, in the ED range of 0.01 to 9999 mSv is performed as follows.

5.2.7.5.1 Prepare the dosimeter for gamma radiation ED measurement. The initial ED readings should be “0.000 mSv”.

5.2.7.5.2 Fix the dosimeter on the phantom as stated in 5.2.7.3 in the УПГД-3Б carriage so that the mechanical center of the collimator coincides with the mechanical center of the dosimeter’s detector.

5.2.7.5.3 Prepare the dosimeter for ED measurement and place the УПГД-3Б carriage together with the phantom and the dosimeter in the position, where EDR from ^{137}Cs source with radionuclide is $\dot{H}_{p0}(10)$ = (12±2) μSv/h and at the same time switch on the stop-watch and place the source into the collimator.

5.2.7.5.4 In the period of time (according to the stop-watch) expressed in seconds and calculated by the formula $t = 3600 + t_{\partial}$, where t_{∂} is the period of time expressed in seconds used to place the source into the collimator, take ED measurement result. Switch the dosimeter off afterwards.

5.2.7.5.5 Calculate the limit of main relative permissible error of ED measurement in percentage by the formula

$$\delta H_p(10) = 1{,}1\sqrt{\left(\frac{H_p(10) - H_{p0}(10)}{H_{p0}(10)}\right)^2 + \left(\frac{\delta H_{p0}(10)}{2}\right)^2}, \qquad (5.3)$$

here $H_{p0}(10) = \dot{H}_{p0}(10) \cdot t$ - ED of the УПГД-3Б carriage;

$\delta H_{p0}(10) = \sqrt{\left(\delta \dot{H}_{p0}(10)\right)^2 + \left(\delta t\right)^2}$ - main relative permissible error limit of ED of the УПГД-3Б carriage;

$\delta t = \dfrac{1{,}1\sqrt{\left(\Delta t_c\right)^2 + \left(\Delta t_p\right)^2 + \left(\Delta t_\partial\right)^2}}{t}$ - main relative permissible error limit of ED exposure time measurement that should not exceed 5 %;

Δt_c - permissible error limit of the stop-watch;

Δt_p = 1 c - error caused by response of a user;

Δt_∂ = 1 c - error caused by the process of placing the source into the collimator.

5.2.7.5.6 Perform operations 5.2.7.5.1-5.2.7.5.5 for EDR $\dot{H}_{p0}(10)$ = (120±20) μSv/h.

5.2.7.5.7 Perform operations 5.2.7.5.1-5.2.7.5.5 for EDR $\dot{H}_{p0}(10)$ = (12±2) mSv/h.

5.2.7.5.8 Perform operations 5.2.7.5.1-5.2.7.5.5 for EDR $\dot{H}_{p0}(10)$ = (120±20) mSv/h.

5.2.7.5.9 Perform operations 5.2.7.5.1-5.2.7.5.3 for EDR $\dot{H}_{p0}(10)$ = (900±100) mSv/h for the time period (according to the stop-

watch), which is calculated by the formula $t = \left(60 + \frac{36000}{\dot{H}_p(10)}\right) + t_\partial$, where $\dot{H}_p(10)$ is a numeric EDR value, expressed in μSv/h. Take the ED measurement results and perform operations 5.2.7.5.5. Switch the dosimeter off afterwards.

5.2.7.5.10 Maximum value of all received errors is the limit of main relative permissible error of gamma radiation ED measurement.

5.2.7.5.11 The result of the dosimeter verification is considered positive if the main relative permissible error limit of gamma radiation ED measurement in the EDR range of 1.0 μSv/h to 1.0 Sv/h and the ED range of 0.01 mSv to 9999 mSv at 0.95 confidence probability does not exceed 15 %.

5.2.7.5.12 If the limit of main relative permissible error of gamma radiation ED measurement does not meet the requirements stated in 5.2.7.5.11, the dosimeter can not be verified and should be sent for repair.

5.2.7.6 Presentation of verification results

5.2.7.6.1 Positive results of primary or periodic verification are registered as follows:

- primary verification is registered in the “CERTIFICATE OF ACCEPTANCE” section;
- periodic verification is registered in the issued Certificate of the established form.

5.2.7.6.2 If recognized inapplicable for use the dosimeter:

- should not be allowed to manufacture and use at primary verification;
- gets the certificate of inadequacy during use and after repair.

6 STORAGE

6.1 The dosimeters should be stored packed, safe from mechanical damage in dry, ventilated and clean storehouses at the ambient temperature from +5 to +40 °C and relative humidity up to 80 % at + 25 °C temperature. The storehouse should be free of dust, acids, gas, vapors of organic solvents, and alkali that may cause corrosion.

6.2 Maximum shelf life of the dosimeters in packing is 3 years.

7 SHIPPING

7.1 Packed dosimeters may be shipped at the ambient air temperature from - 50 to + 50 °C; relative humidity (95±3) % at + 35 °C temperature by railway, air, water or motor transport at any distances in conformance with the following rules:

- by railway transport – in a clean box car;
- by air transport – in pressurized compartments;

- by water transport – in a dry hold;
- by motor transport – in a closed car.

7.2 The dosimeters in shipping container should be placed and fixed in the vehicle to ensure their stable position and to avoid shocks.

7.4 Observe the inscriptions on the shipping container at loading and unloading the dosimeters.

7.5 The dosimeters must not be exposed to the influence of atmospheric precipitations during loading-unloading.

7.6 The dosimeters may be delivered in parcels in conformance with the international rules.

8 DISPOSAL

Disposal of the dosimeter is performed in compliance with the general rules, i.e. metals are recycled or melted, and plastic parts are dumped.

Note. If the dosimeter is soiled by liquids or dry radionuclides, and it is impossible to completely deactivate it, it should be buried as solid radioactive waste.

9 WARRANTY

9.1 The manufacturer guarantees the conformity of the dosimeter to the technical requirements provided that the customer observes the guidelines for its use, shipping and storage presented in the operating manual.

9.2 The warranty period of the dosimeter use shall terminate and be of no further effect in not less than 18 months after the date of putting it into operation, or after the end of the storage period.

9.3 The warranty period of storage of the dosimeter is 6 months after its manufacture date.

9.4 The warranty period is prolonged for the time when the dosimeter has been under warranty repair.

9.5 Warranty is invalid in case of use, shipping and storage violations, any mechanical damages, or if the warranty seals are violated. In this case the repair is performed at the user's expense.

9.6 After the warranty period terminates, the repair of the dosimeter is performed under separate contracts (as further agreed).

9.7 Warranty and post-warranty repair is done only by the manufacturer.

10 PACKING CERTIFICATE

The DKG-21 personal gamma radiation dosimeter of BICT.412118.014 type with _____ serial number is packed by the Private Enterprise “SPPE “Sparing-Vist Center” in accordance with the requirements specified in ТУ У 33.2-22362867-010:2007.

_____ _____

(position) (signature / print full name)

_____

(year, month, date)

11 CERTIFICATE OF ACCEPTANCE

The DKG-21 personal gamma radiation dosimeter of BICT.412118.014 type with _____serial number is manufactured to meet the technical requirements specified in ТУ У 33.2-22362867-010:2007, and is accepted for use.

QCD head _____
(signature / print full name)

М.П.

State verification officer _____
(signature / print full name)

Verification mark here

_____
(year, month, date)

12 REPAIR

12.1 In case of failure or troubles during the warranty period of the dosimeter, the user should contact the producer enterprise by e-mail (see below) to receive the address of the nearest service center:

PE “SPPE “Sparing-Vist Center”
Tel.: (+380 32) 242 15 15; Fax: (+380 32) 242 20 15
E-mail: sales @ ecotest.ua

13 ACCEPTANCE AND WARRANTY

The DKG-21 personal gamma radiation dosimeter of BICT.412118.014 type with _____ serial number, repair type _____ is accepted in accordance with the requirements specified in ТУ У 33.2-22362867-010:2007, and is accepted for operation by the manufacturer PE "SEPP "Sparing-Vist Center".

Life till scheduled repair _____

during service life _____ years,

shelf life included _____

PE "SPPE "Sparing-Vist Center" guarantees the conformity of the dosimeter to the technical requirements ТУ У 33.2-22362867-010:2007 provided that the customer observes the requirements of the operating manual.

QCD head _____

(signature / print full name)

Stamp here _____

(year, month, date)

APPENDIX A

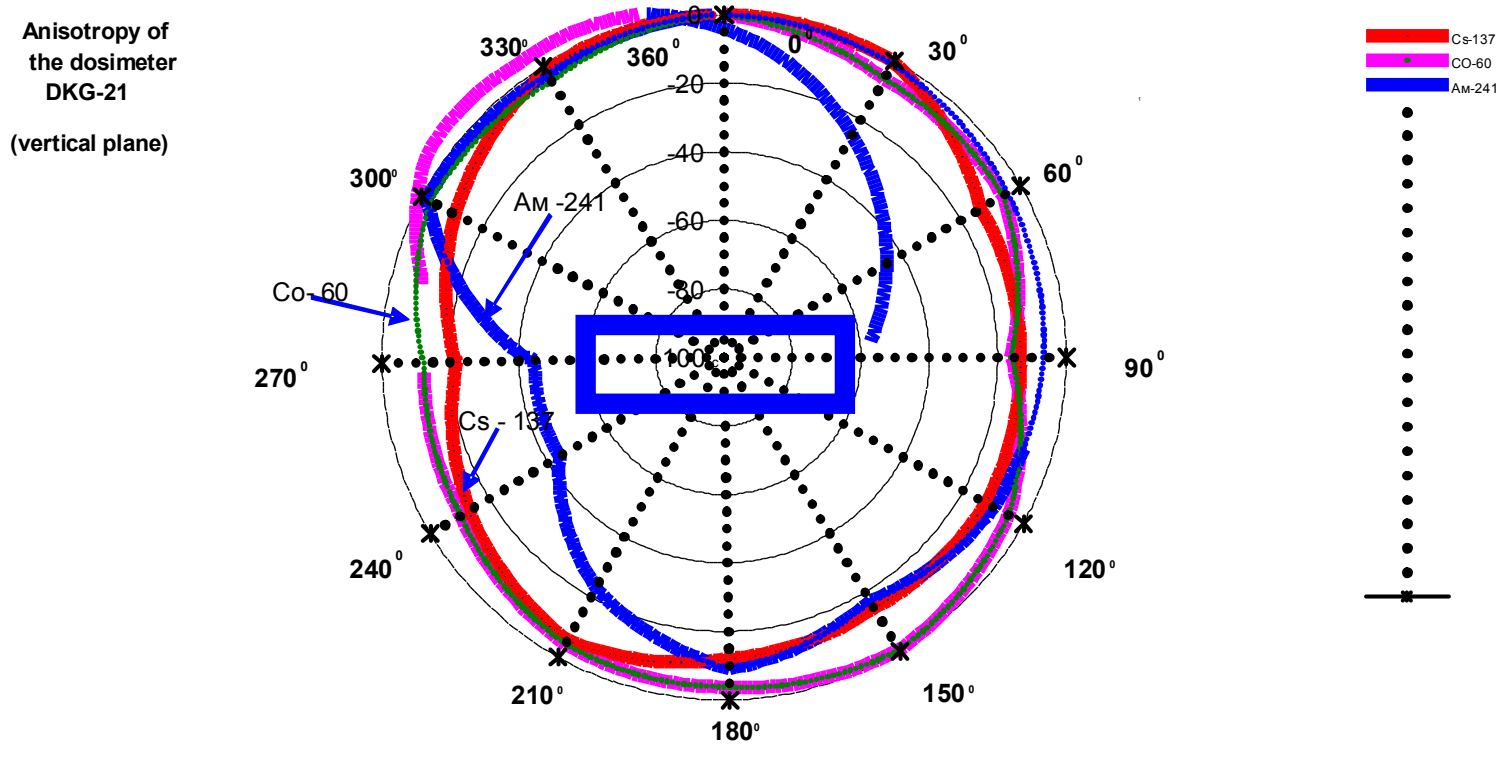

Figure A.1

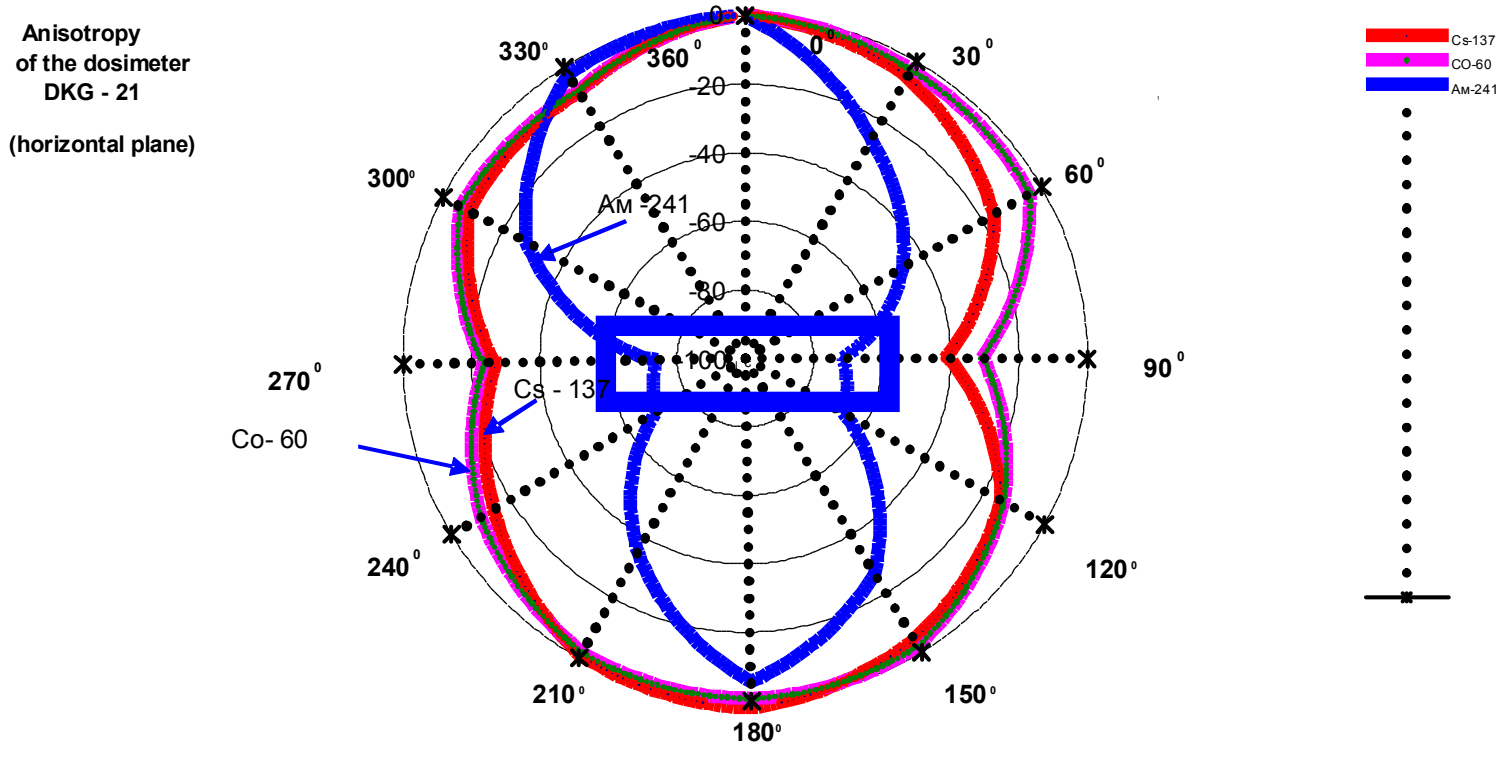
Anisotropy
of the dosimeter
DKG - 21
(horizontal plane)
0
-20
-40
-60
-80
-100
0°
30°
60°
90°
120°
150°
180°
210°
240°
270°
300°
330°
360°
Am -241
Cs - 137
Co- 60
Cs-137
CO-60
Am-241

Figure A.2

APPENDIX B

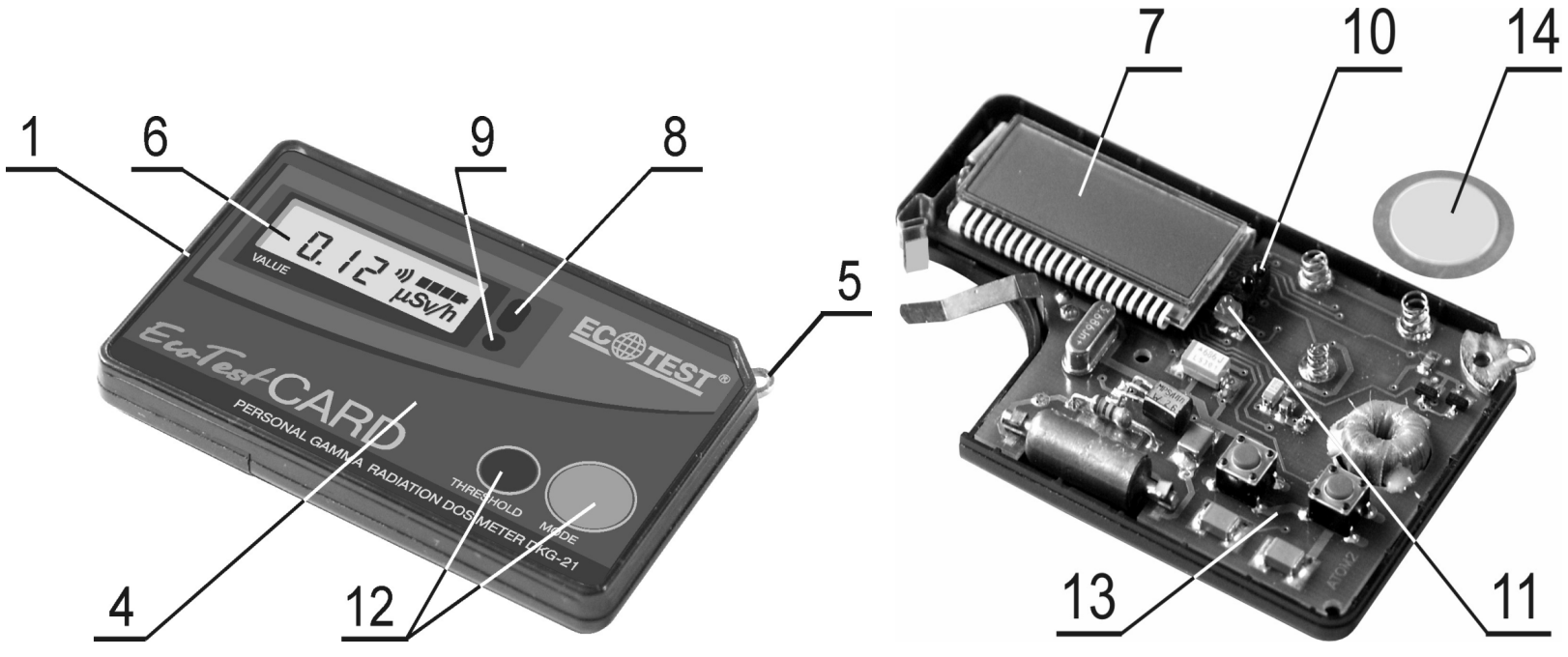

Figure B.1 – Front view of the dosimeter with the removed upper cover

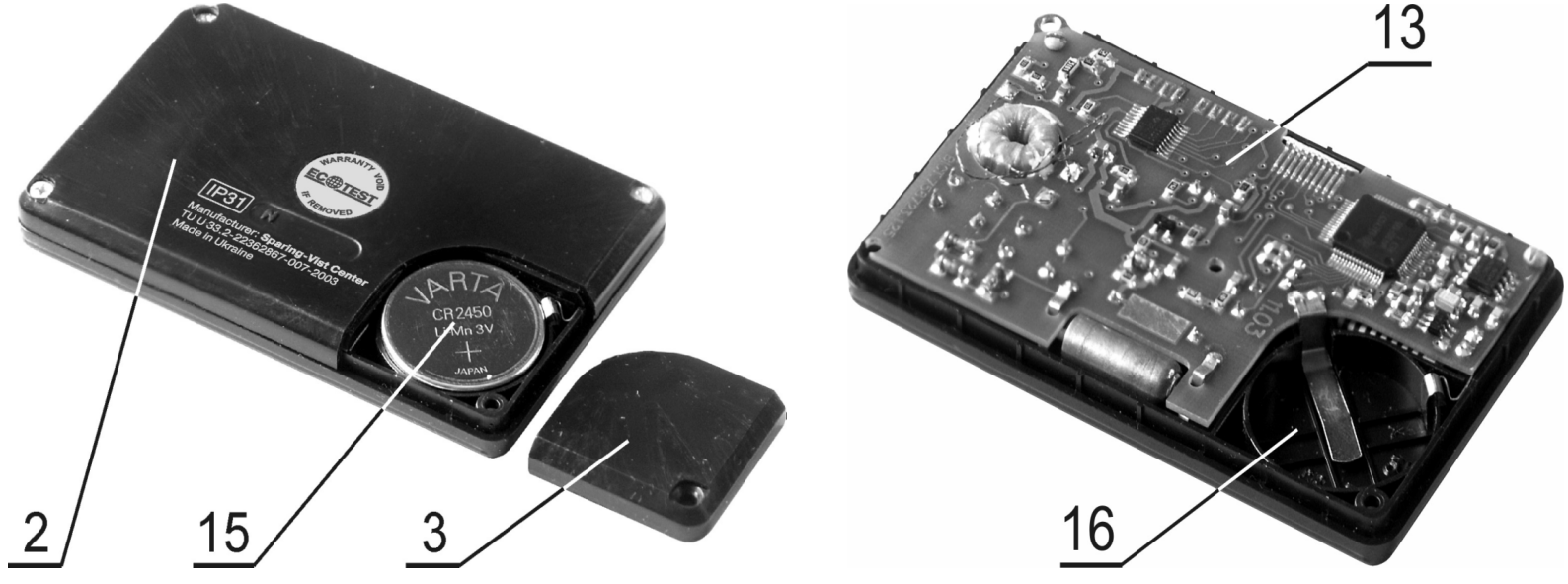

Figure B.2 - Rear view of the dosimeter with the removed lower cover

APPENDIX C

PRIMARY AND PERIODIC VERIFICATION OF KEY SPECIFICATIONS

Verified specification		Date of measurement			
Name	Value according to specification	year 20		year 20	
		Actual value	Measured by (position, signature)	Actual value	Measured by (position, signature)
1 Main relative error limit of the dosimeter at photon-ionizing radiation EDR measurement with confidence probability of 0.95, % in the EDR range: - from 1.0 μSv/h to 10 μSv/h - from 10 mSv/h to 1.0 Sv/h	20 % 15 %				

APPENDIX C

C-1

Date of measurement					
year 20		year 20		year 20	
Actual value	Measured by (position, signature)	Actual value	Measured by (position, signature)	Actual value	Measured by (position, signature)

APPENDIX C

PRIMARY AND PERIODIC VERIFICATION OF KEY SPECIFICATIONS

Verified specification		Date of measurement			
Name	Value according to specification	year 20		year 20	
		Actual value	Measured by (position, signature)	Actual value	Measured by (position, signature)
2 Main relative error limit of the dosimeter at photon-ionizing radiation ED measurement in the EDR range from 1.0 μSv/h to1 Sv/h with confidence probability of 0.95 in the ED range: - from 0.01 to 9999 mSv	15 %				

APPENDIX C

C-2

Date of measurement					
year 20		year 20		year 20	
Actual value	Measured by (position, signature)	Actual value	Measured by (position, signature)	Actual value	Measured by (position, signature)

LIST OF ABBREVIAITONS

ASPDC	- automated system of personal dosimetry control
B	- battery
LS	- loudspeaker
IRD	- ionizing radiation detector
ED	- equivalent dose
NVM	- nonvolatile memory
EDR	- equivalent dose rate
DCC	- detector control circuit
IPC	- infrared port circuit
DPCC	- digital processing and control circuit
AVF	- anode voltage former
LCD	- digital liquid crystal display